Harvard

VENTURE LIGHTING

REV 1.2

CoolLED

LED DRIVERS

CL Low Power

Up to 10W

250mA, 350mA, 500mA and 700mA

CoolLED drivers provide a high performance solution for powering high-brightness LEDs from a mains supply.

The power factor corrected, class II driver has fully isolated, SELV output delivering up to 10W of power.

All CoolLED Drivers have a high efficiency design, which ensures cool operation and long life. The compact enclosure is available in Integral (B) and Remote Mount (C) versions. Remote types feature screwless cable clamps.

These drivers have been optimised to deliver good efficiency and power factor for loads 10W and below

CoolLED Drivers are open and short-circuit protected and have self resetting over temperature trip.

Product Description

- 220-240 Input voltage
- Power factor corrected (0.98)
- Constant current output
- Self resetting thermal trip
- Double insulated (Class II)
- Up to 88% efficiency
- Surge protection up to 4kV
- SELV isolation
- Integral and remote versions
- Screwless cable clamps for fast assembly (C style)
- Flying lead version ('A' style) available upon request

Wiring diagram

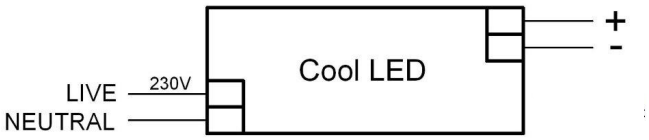

CB SCHEME

VENTURE LIGHTING

Venture Lighting Europe Ltd
Unit 11, Sills Road, Castle Donington, Derby, DE74 2US, United Kingdom
Tel: +44 (0) 1923 692600
www.venturelightingeurope.com

CoolLED LED DRIVERS

Technical Specification

Mains input voltage	220 to 240V ac RMS Nominal
DC input voltage	190V-245V
Mains frequency	0/50/60Hz***
Mains surge Protection	4kV common-mode 2kV differential
Input-output isolation	3kV ac rms
Mains inrush current	45A peak decaying over 20us
Humidity	95% max non-condensing
Thermal trip	110°C - internal self-resetting
Ambient temperature range	-25°C to 50°C
Maximum Tc temperature	80°C
Terminal blocks	Rising clamp 10mm pitch input, 5mm pitch output
Enclosure	White polycarbonate UL94-V0 rated
Wire size	0.5mm to 1.5mm^2

Case Style	Dimensions	Weight	Box Quantity
A - Flying leads	150mm x 31.5mm x 31mm	120g	50
B - Integral	150mm x 32mm x 32mm	120g	50
C - Cable clamps	180mm x 32mm x 32mm	120g	50

Tolerance: + or - 0.3mm

Variants

Part number	Current	LED String Voltage	Output power range	Power factor at full load	Efficiency at full load
CL250L-240- A/B/C	250mA (±5)	6V to 40V	1.5 - 10W	>0.95	86%
CL350L-240-A/B/C	350mA (±5)	6V to 30V	2.1 - 10W	>0.95	86%
CL500L-240-A/B/C	500mA (±5)	6V to 20V	3 - 10W	>0.95	85%
CL700L-240-A/B/C	700mA (±5)	6V to 15V	4.2 - 10W	>0.95	83%

Operation

*** Drivers are suitable for DC & AC operation at 0/50/60 Hz and compliant to EN50172 and EN 60598-2-22. However, the luminaire manufacturer needs to check if the luminaire would be compliant with the 'high risk task lighting' requirements based on the LED load used in the luminaire and the battery backup system.

Compliance

Approval	Standards
ENEC (Europe)	EN61347-1:2008+A1:2011+A2:2013, EN61347-2-13:2014, EN62384:2006+A1:2009
CE (Europe)	LVD:2014/35/EU; EMC:2014/30/EU; RoHS:2011/65/EU;ECOD/2009/125/EC
CB (International)	IEC 61347-1:2007 (second edition)+A1:2010 +A2:2012; IEC 61347-2-13:2014 (second edition); IEC 62384:2006 (First edition)+A1:2009

CB SCHEME

VENTURE LIGHTING

Venture Lighting Europe Ltd
Unit 11, Sills Road, Castle Donington, Derby, DE74 2US, United Kingdom
Tel: +44 (0) 1923 692600
www.venturelightingeurope.com

Efficiency Vs Output Power

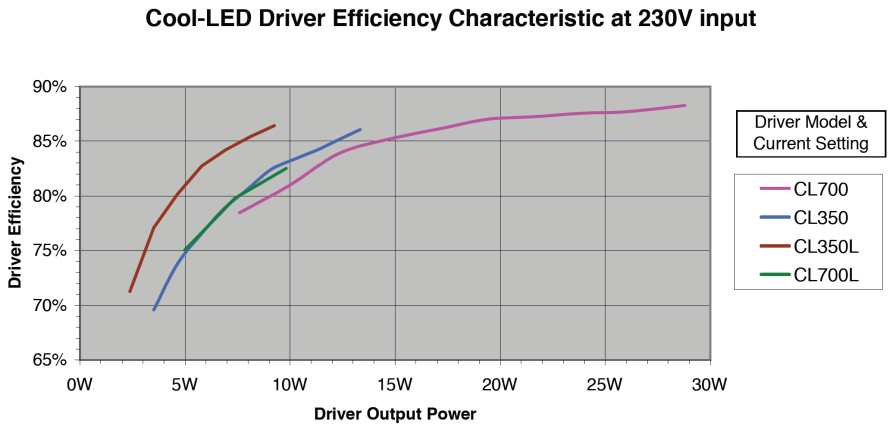

Power factor Vs Output Power

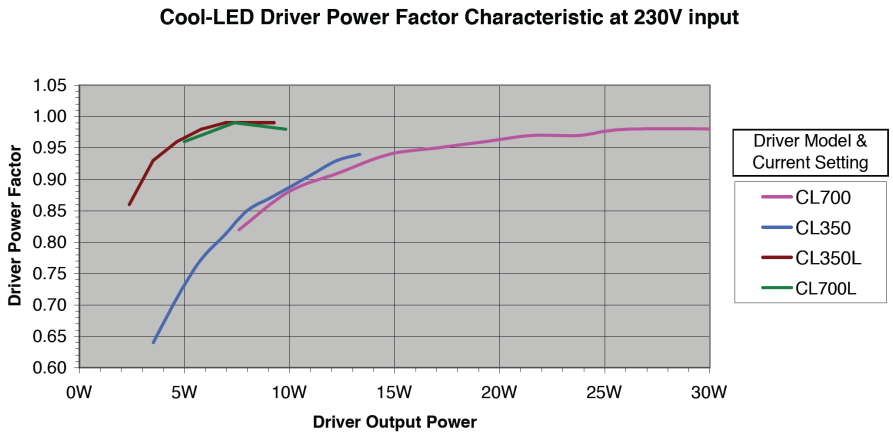

Note: CL350 curves also apply to CL700S product when switched to 350mA output

Dimensions

A Style (Flying Lead)

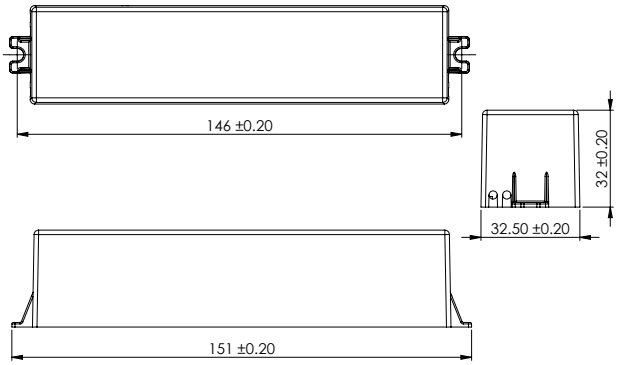

B Style (Integral)

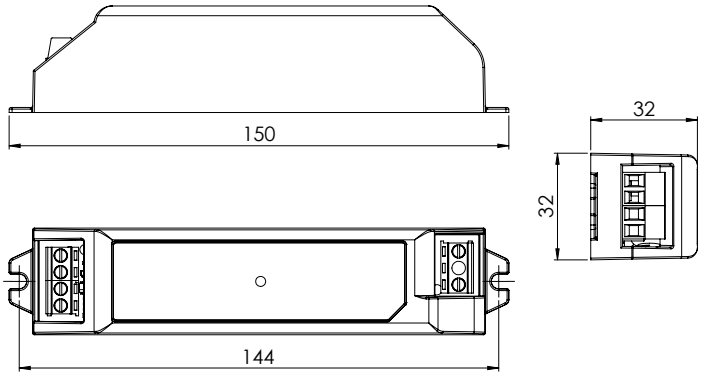

C Style (Remote)

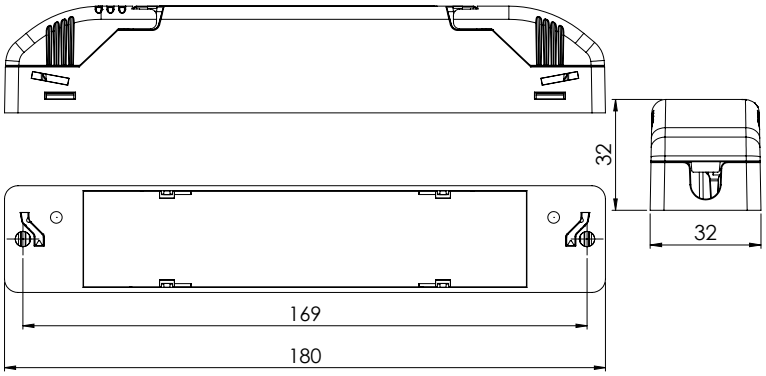

PLEASE NOTE
Information given in this datasheet is for illustration purposes only and subject to change without prior notice.
No liability is accepted for printing errors. Reference made to third party approval or certification may be subject to ongoing licence transfers and may not be fully implemented.

VENTURE LIGHTING
Venture Lighting Europe Ltd
Unit 11, Sills Road, Castle Donington, Derby, DE74 2US, United Kingdom
Tel: +44 (0) 1923 692600
www.venturelightingeurope.com