Batten Instructions

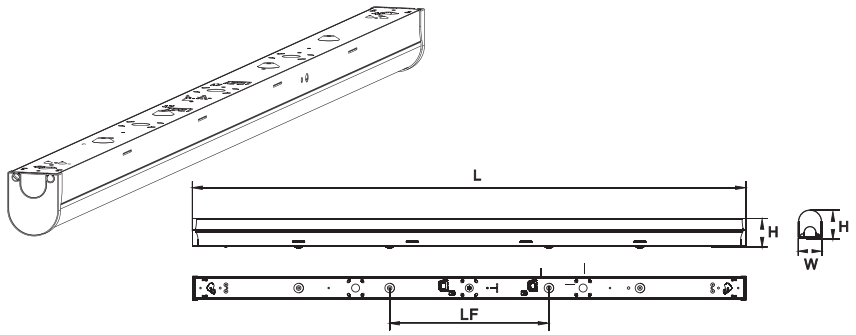

Power	L	W	H	LF
16W	1160.5	61.5	77.5	420
32W	1160.5	61.5	77.5	420
27W	1460.5	61.5	77.5	420
50W	1460.5	61.5	77.5	420
36W	1722.5	61.5	77.5	420
72W	1722.5	61.5	77.5	420

1

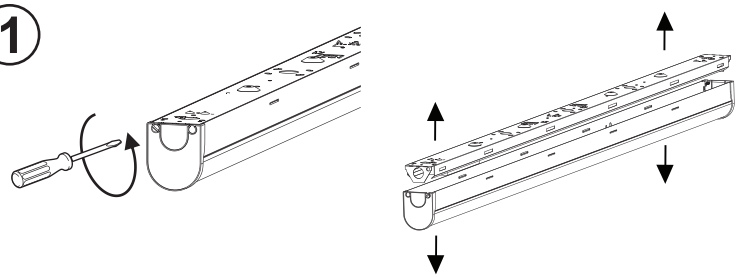

2

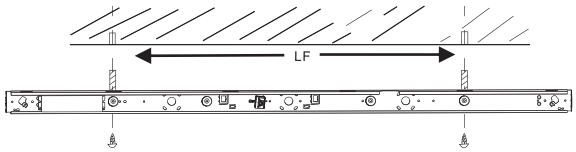

3

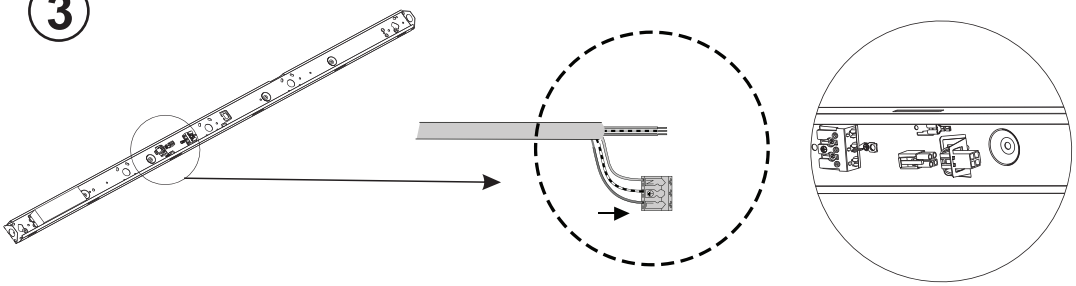

4

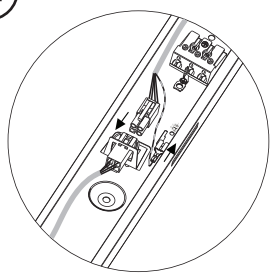

5

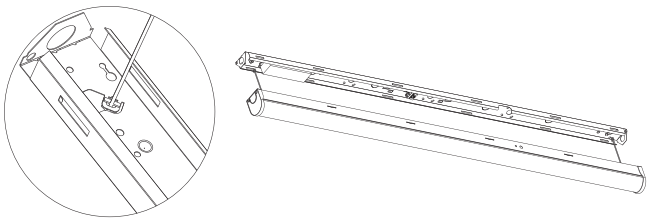

6

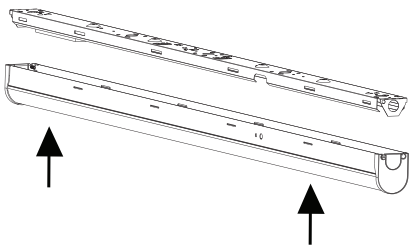

7

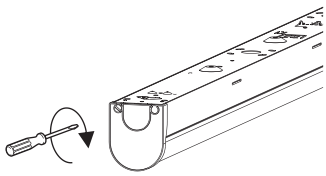

8

For Emergency Versions.
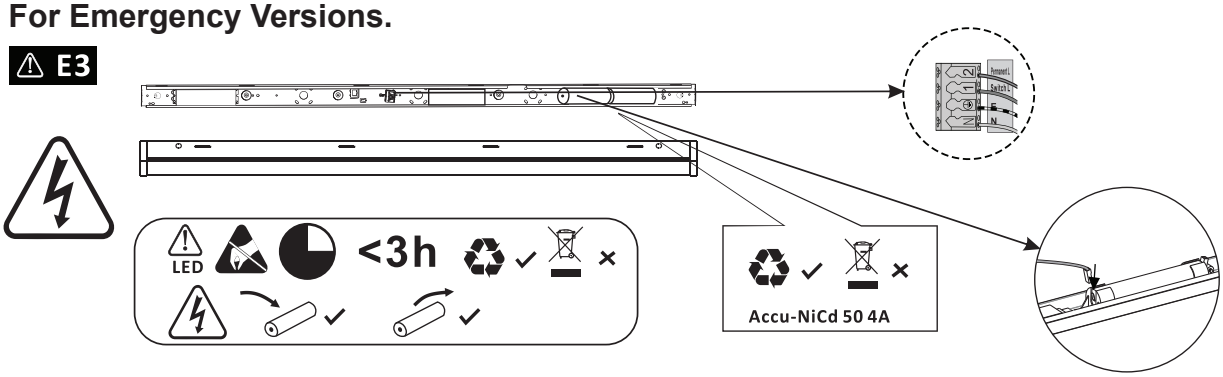
E3